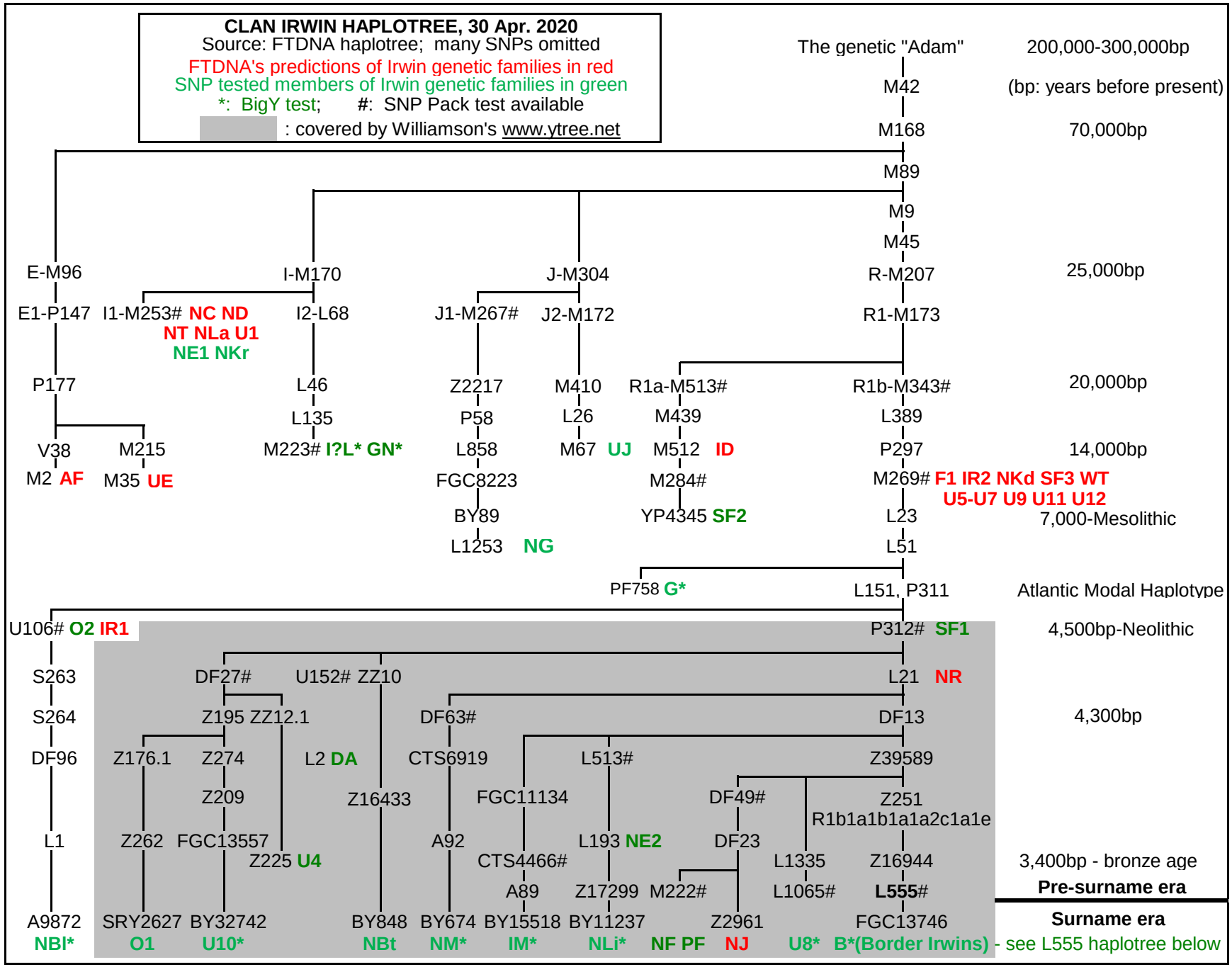
CLAN IRWIN HAPLOTREE, 30 Apr. 2020
Source: FTDNA haplotree; many SNPs omitted
FTDNA's predictions of Irwin genetic families in red
SNP tested members of Irwin genetic families in green
*: BigY test; #: SNP Pack test available
: covered by Williamson's www.ytree.net
The genetic "Adam"
200,000-300,000bp
M42
(bp: years before present)
M168
70,000bp
M89
M9
M45
R-M207
25,000bp
R1-M173
E-M96
E1-P147
I1-M253# NC ND NT NLa U1 NE1 NKr
I-M170
I2-L68
J-M304
J1-M267#
J2-M172
P177
V38
M2 AF
M215
M35 UE
L46
L135
M223# I?L* GN*
Z2217
P58
L858
FGC8223
BY89
L1253 NG
M410
L26
M67 UJ
R1a-M513#
M439
M512 ID
M284#
YP4345 SF2
R1b-M343#
L389
P297
M269# F1 IR2 NKd SF3 WT U5-U7 U9 U11 U12
L23
L51
20,000bp
14,000bp
7,000-Mesolithic
PF758 G*
L151, P311
Atlantic Modal Haplotype
U106# O2 IR1
P312# SF1
4,500bp-Neolithic
S263
S264
DF96
L1
A9872 NBI*
DF27#
Z195 ZZ12.1
Z176.1
Z274
Z209
Z262
FGC13557
Z225 U4
SRY2627 O1
BY32742 U10*
U152# ZZ10
L2 DA
Z16433
BY848 NBt
DF63#
CTS6919
A92
BY674 NM*
FGC11134
CTS4466#
A89
BY15518 IM*
L513#
L193 NE2
Z17299
BY11237 NLi*
L21 NR
DF13
Z39589
DF49#
DF23
M222#
Z2961 NF PF NJ
Z251
R1b1a1b1a1a2c1a1e
L1335
L1065#
Z16944
L555#
FGC13746
U8* B*(Border Irwins)
4,300bp
3,400bp - bronze age
Pre-surname era
Surname era
- see L555 haplotree below